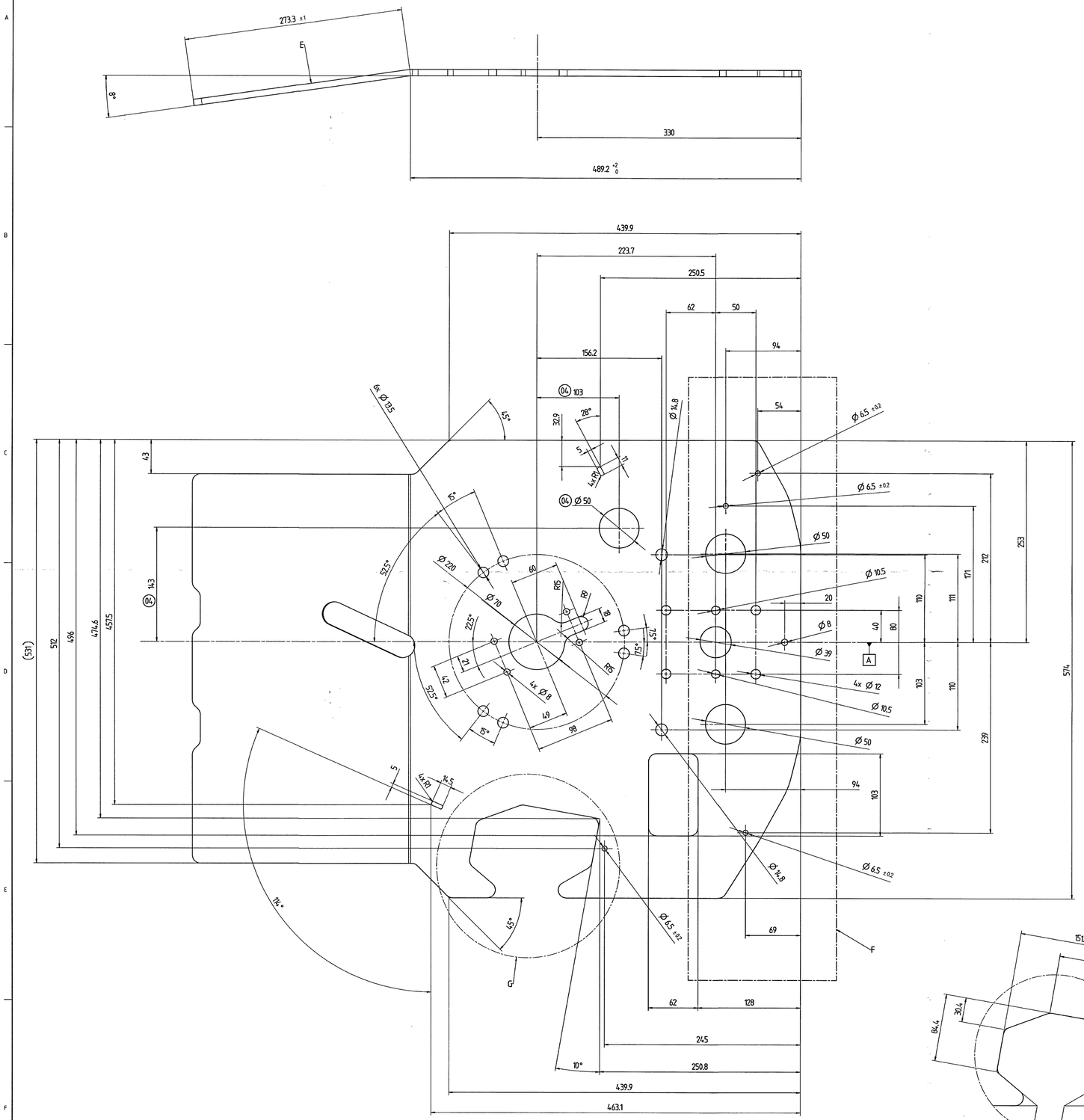

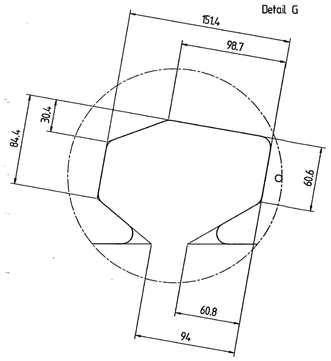

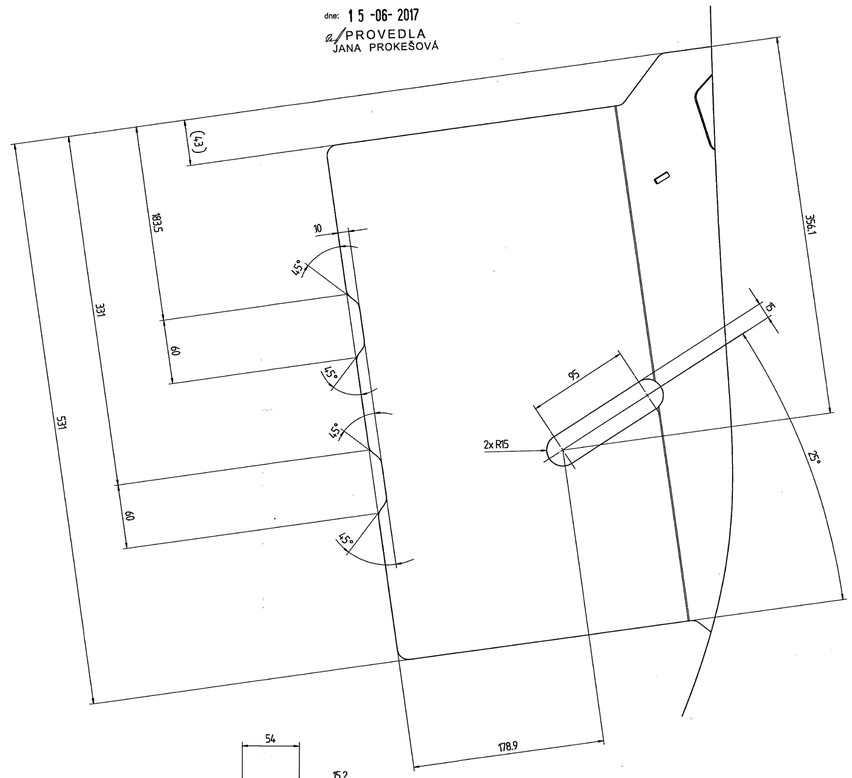

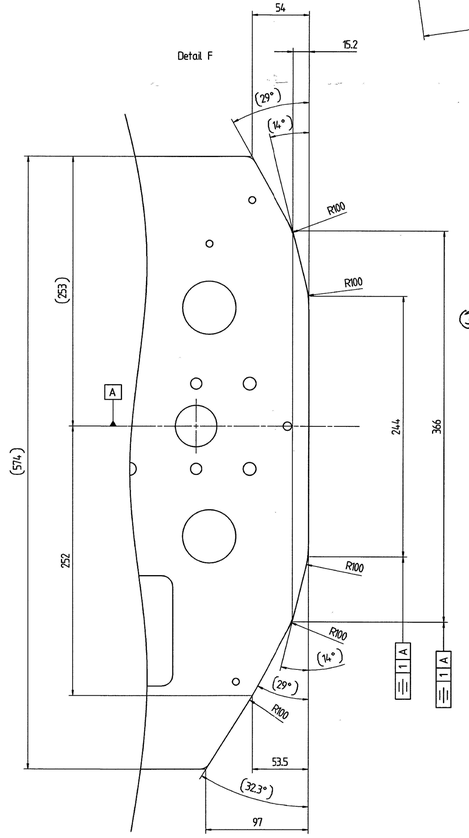

PŘEKLAD

dne: 15-06-2017

PROVEDLA
JANA PROKEŠOVÁ

(3) - ZMĚNA NA L2, DLE POŽADAVKU ZÁKAZNÍKA
28.4.2017

28-07-2017
ARCHIV
4
ZM/17/00570

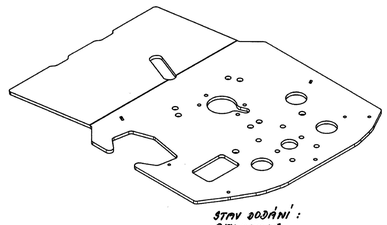

STAV DODÁNÍ: BEZ OKUJÍ MASTNOTA POVOLENA

POZNÁMKA
- TLOUŠŤKA MATERIÁLU
- NEKÓTOVANÉ POLOMĚRY
- POLOMĚRY OHYBŮ
- DÉLKA ROZVINU

NOTA :
- Metal sheet thickness : 8 mm
- Radii without dimension : R = 10
- Bend radii : R = 8
- Unfolded length (for info) = /

Condition at time of delivery	
de-scaled (degree of purity SA 2 1/2 acc. ISO 8501-1)	X
without burrs acc. WN 11310	
Permissible top-end rounding during flame cutting (also positive bead acc. WN 10572)	
oil-free / free of grease	
oiled	
oiling permissible	X
Indicate the required condition at time of delivery with an X.	

First angle projection

General tolerance (GT) in mm
Size range: ≤ 30 | > 30 ≤ 120 | > 120 ≤ 400 | > 400 ≤ 1000 | > 1000
GT coarse: L 1 2 2 3 4 / ◁ 1 2 4 6
Lengths (L) and angle (L, ◁) = ±GT
Tolerance Symbols ISO 1101
○ roundness = 1/2e-Tol
⏥ straightness/flatness = GT
⌯ concentricity/run out = GT
⌯ symmetry = GT
/ / parallelism = GT
⊕ position = GT
Languages: EN/FR

Index	alteration	Change no	Fit	Toler.
04	modified cut for access grease nipples (becomes 1150)	1194.07		
	UPRAVEN ŘEZ PRO MAZNICE			

Inspection dim. / Auxiliary dim. ( ) / Date / Name
Drawn 19.01.2017 P.CHOCHU
Checked 08.02.2017 D.Frechet
Auth'd 31.05.2017 D.Sodan
M.check 29.05.2017 F.Mariannesu

Material: S235JR following EN10025-2
Blank no.
Title: plate
front
Weight: in Kg 22.7
Prod.
Scale 1:2 1:5
Sheet: 1 of: 2
Drawing number: 11914010500
Confidential document
Refer to protection notice ISO 16016
Repl.
Orig.
Released
104.0881/D2D/001/04
A0
11914010500/04.EN.0001